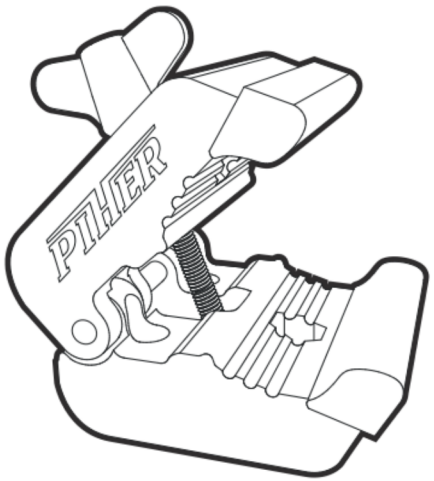

PIHER

MULTICLAMP LINE

INDUSTRIAS PIQUERAS S.A.
Pol. Cantabria 1 · c/ Pescadores, 6
26009 Logroño · Spain
tel. 34 941 254 885
fax. 34 941 256 156
piher@piher.com

WWW.PIHER.COM

COD. 34052

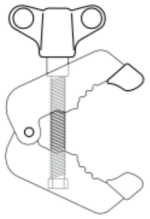

Ø 18-48mm 3/4"-1 7/8"
0-50mm 0-1 7/8"

COD. 34046

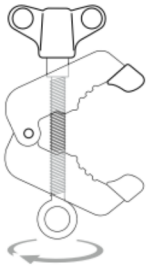

Ø 18-30mm 3/4"-1 1/6"
0-30mm 0-1 1/6"

COD. 34044

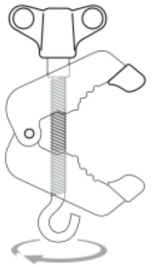

Ø18-30mm
0-30mm

COD. 34048

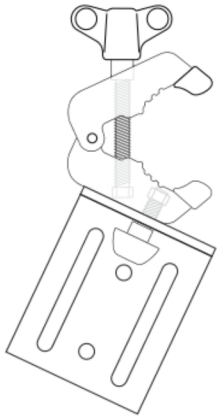

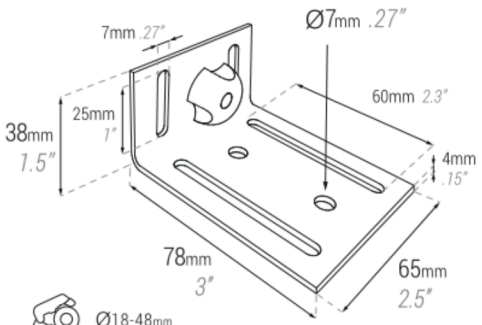

Ø18-48mm
0-50mm

COD. 34051

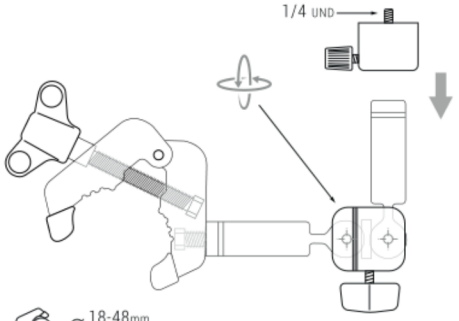

Ø 18-48mm 3/4"-1 7/8"
0-50mm 0-1 7/8"

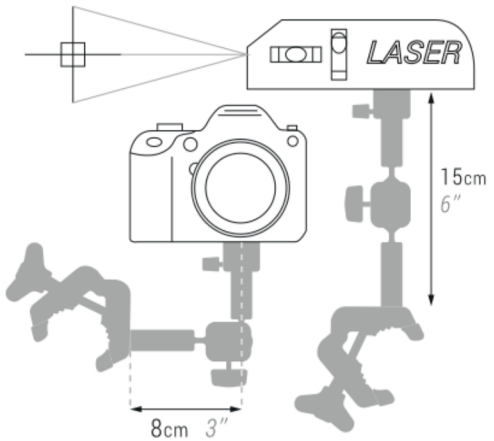

COD. 34054

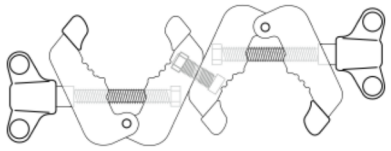

Ø 18-48mm 3/4"-1 7/8"
0-50mm 0-1 7/8"



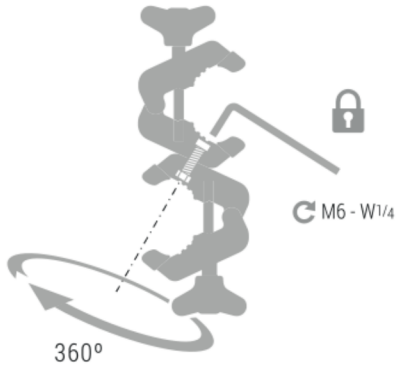

COD. 34055

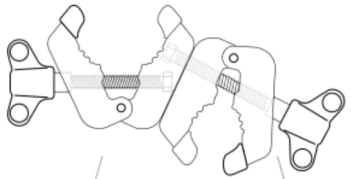

Ø 18-48mm 3/4"-1 7/8"
0-50mm 0-1 7/8"

Ø 18-30mm 3/4"-1 1/6"
0-30mm 0-1 1/6"

